BC Broncos Frame Brace

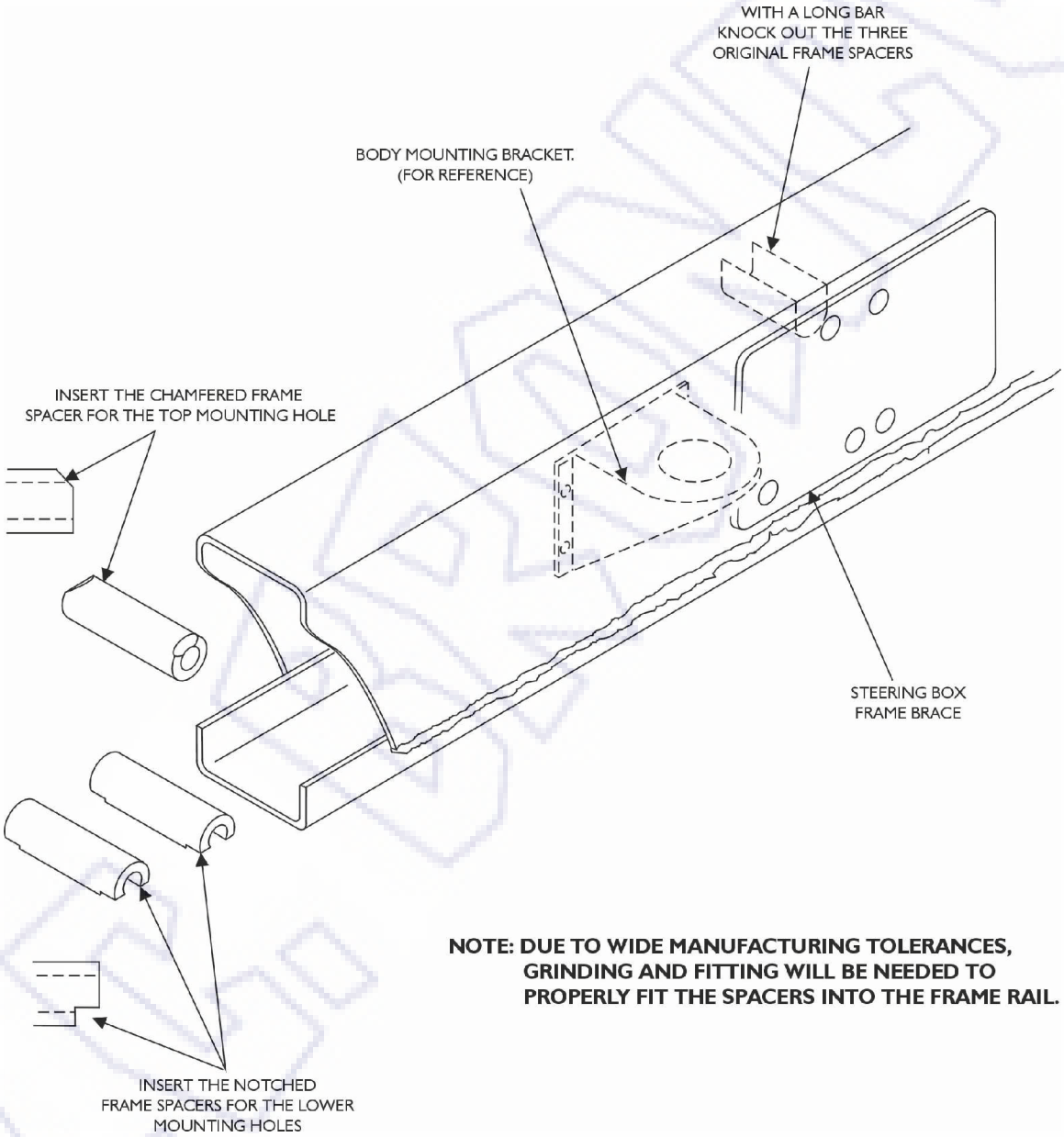

NOTE: DUE TO WIDE MANUFACTURING TOLERANCES, GRINDING AND FITTING WILL BE NEEDED TO PROPERLY FIT THE SPACERS INTO THE FRAME RAIL.

©2001 B.C. BroncosCall B.C. Broncos Tech Support Hotline at (830) 367-1300