BC Broncos EFI In-Tank Pump

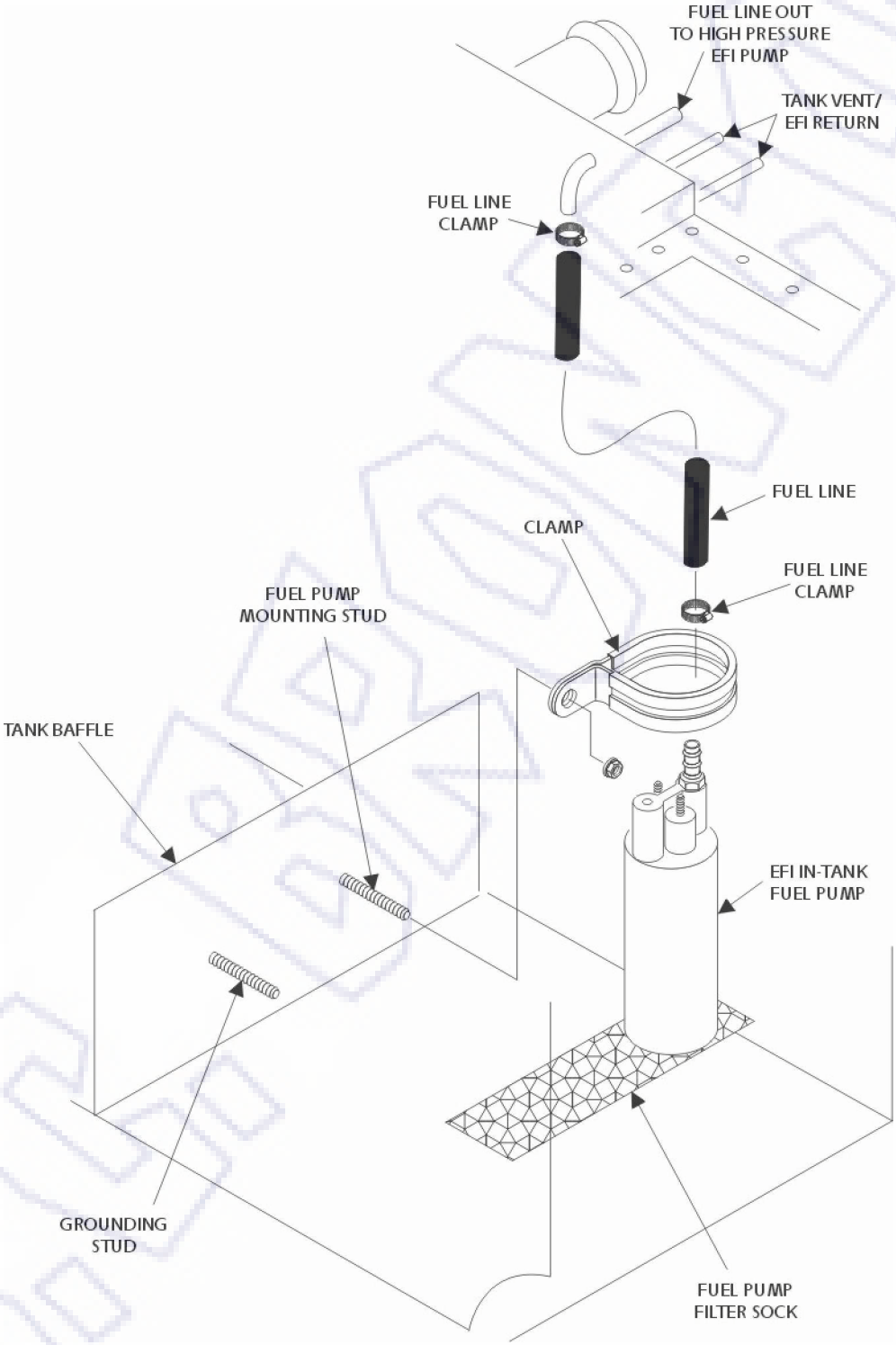

©2001 B.C. BroncosCall B.C. Broncos Tech Support Hotline at (830) 367-1300

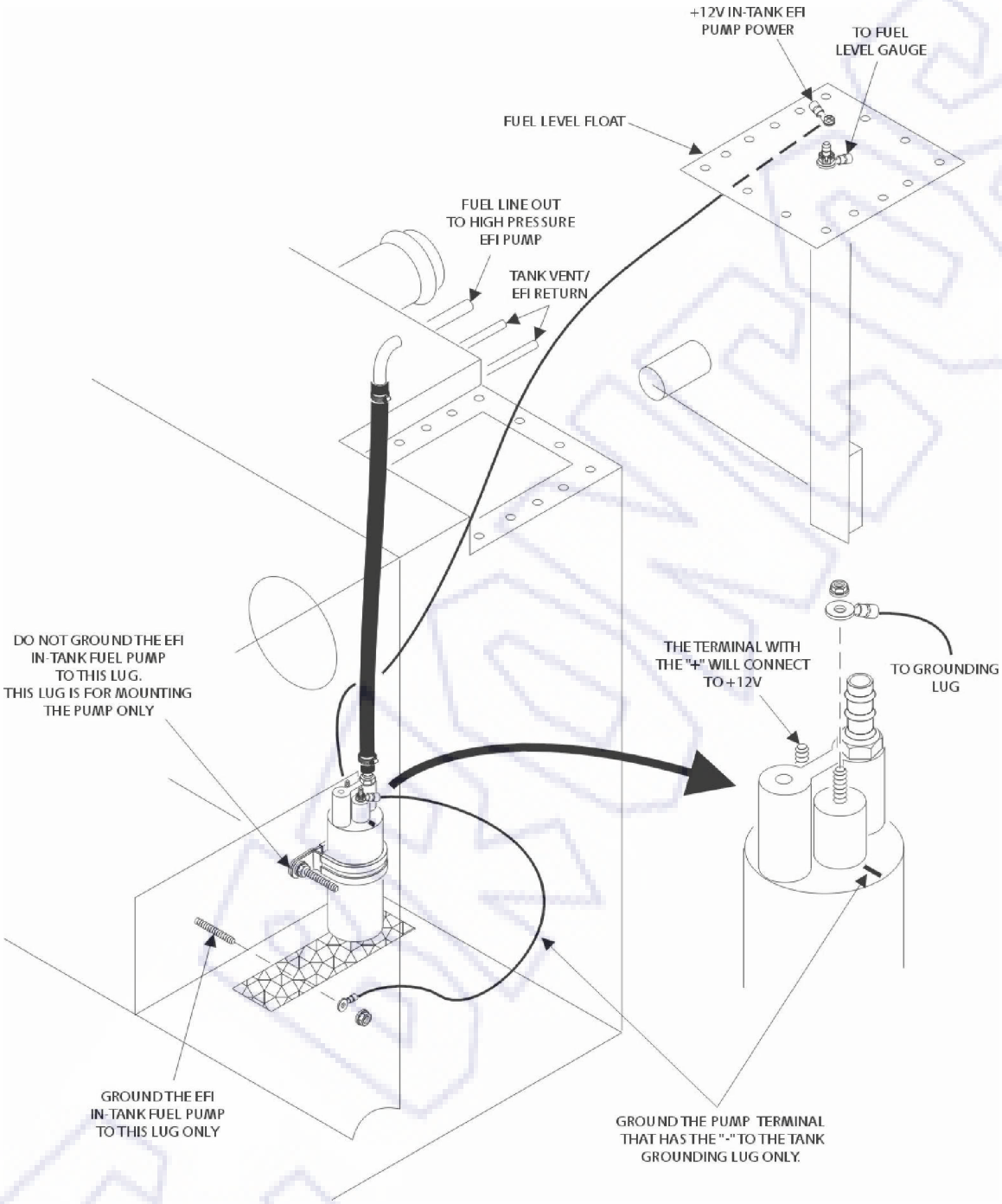

©2001 B.C. BroncosCall B.C. Broncos Tech Support Hotline at (830) 367-1300

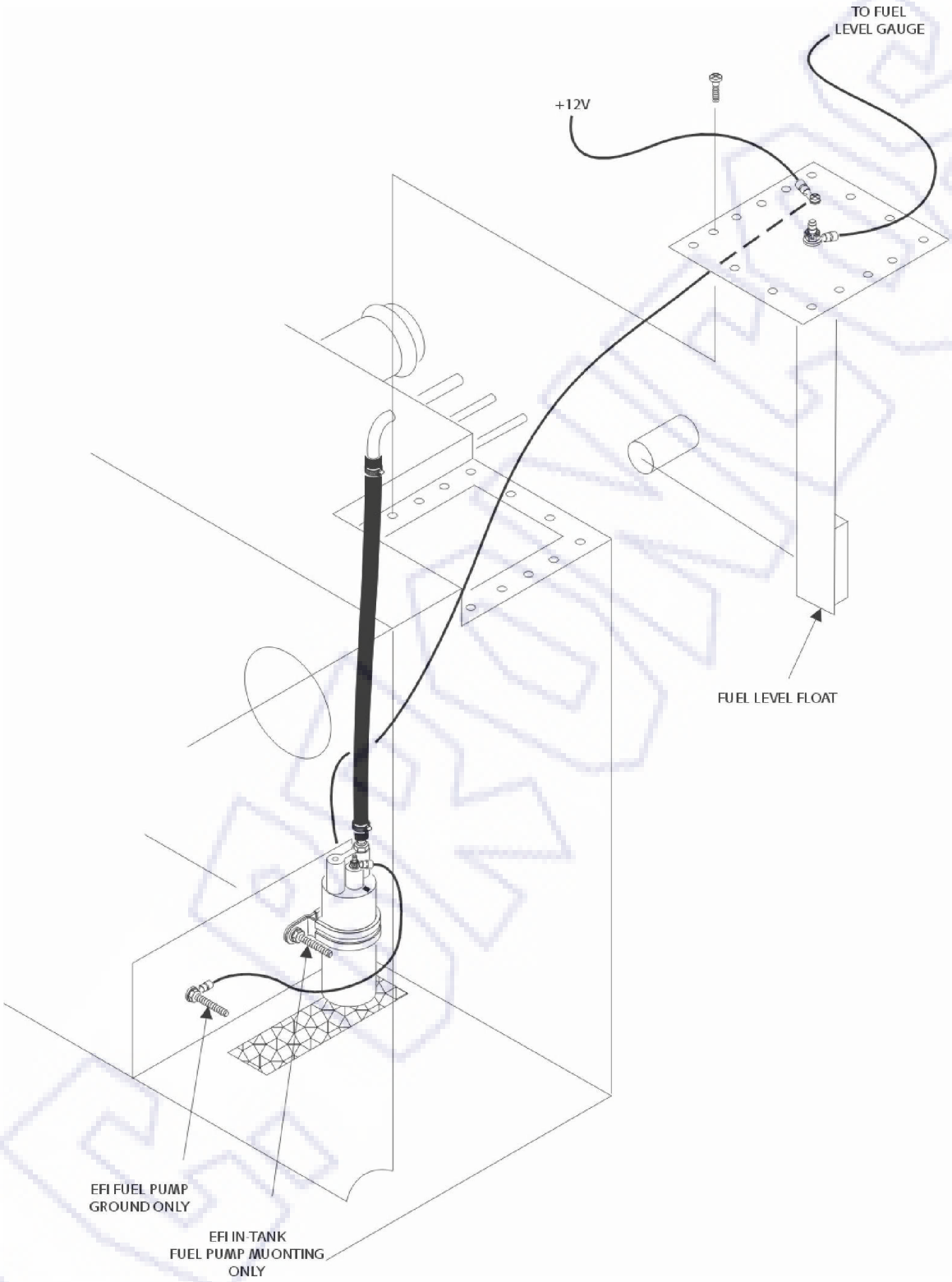

©2001 B.C. BroncosCall B.C. Broncos Tech Support Hotline at (830) 367-1300